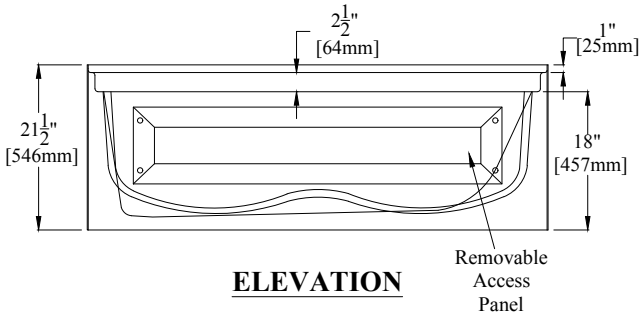


**ELEVATION**

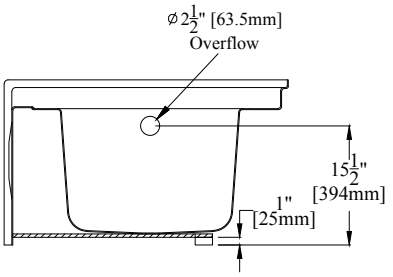


**SECTION "A-A"**

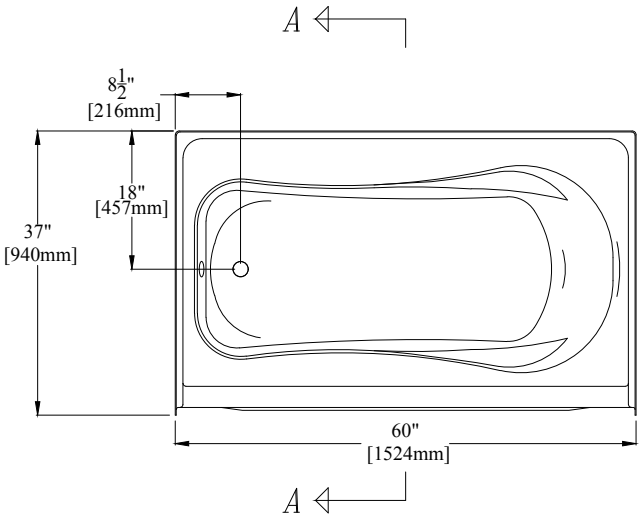


**PLAN**

*60" [1524mm] Bathtub*
*w/ 18" [457mm] Apron, Molded Arm Rests,*
*& Removable Access Panel*

*Left Hand Version (3660LA) Shown*

**PRODUCT SPECIFICATIONS:**

* Product complies with NAHB, HUD UM-73A, and ANSI-Z124.1.2.
* Product has a Class B fire rating as determined by ASTM E-84 test method.
* Reinforced & slip resistant floor.
* Integral 1" [25mm] nailing flange.
* Factory drilled 2 1/2" [64mm] overflow.
* Spacious bathwell with molded arm rests.
* Removable access panel.
* Bathwell Dimensions (At Top): W-54 1/2" [1384mm]
  D-21 3/4" [553mm](At narrowest spot)
  H-16" [406mm]
* Bathwell Dimensions (At Bottom): W-45" [1143mm]
  D-18 3/4" [476mm]
* Bathwell Capacity (At Overflow): 48 gal. [182L]
* Water Level (At Overflow): 12 1/2" [318mm]
* This unit is available without an overflow model becomes (3660LAM or 3660RAM).
* This unit is available without a removable access panel model becomes (3660L or 3660R)
* All dimensions +/- 1/2" [12.8mm]
* Clarion Bathware reserves the right to change design and/or dimensions.
* Dimensions are the same for RE, MP, and all other versions of this model.

*Angel*

# 3660LA or 3660RA

## 60" [1524mm] Bathtub w/ 18" [457mm] Apron, Molded Arm Rests, Left or Right Hand Drain, & Removable Access Panel

Clarion BATHWARE
44 Amsler Ave.
Shippenville, PA 16254

Phone: (814) 226-5374
Toll Free: (800) 576-9228
Fax: (814) 226-0730
www.clarionbathware.com

Signatures For Approval: Date:
Customer: _____ _____
Arch./Engr: _____ _____

Quote #: _____ _____
Job Name: _____ _____

Dwg. # 3660LA or RA -CUT

Dwg. By: NMH
DATE: 4/4/2017

***** IMPORTANT NOTICE *****

**Clarion Bathware reserves the right to change the design and/or dimensions of its products at any time. This drawing may have been updated since this publication was issued. Before placing an order for any product, refer to our website at www.clarionbathware.com to obtain the most current drawings for any products that you wish to purchase. Compare the date of revision of the drawing that you have with the one on the drawing on our website. If you do not have internet access, please call your sales representative or Clarion Bathware's sales department at 1-800-576-9228.**